Shenzhen Boerane Technology Co., Ltd

Wire Thread Inserts

BOERANE
Thread Inserts Expert

Tel: +86-18681431102

Email: info@boeraneinsert.com

Web: www.boeraneinsert.com

Add: Building A, Yongfa industrial Park, Xingyi Road,Long gang District, Shenzhen,
Guangdong Province, China

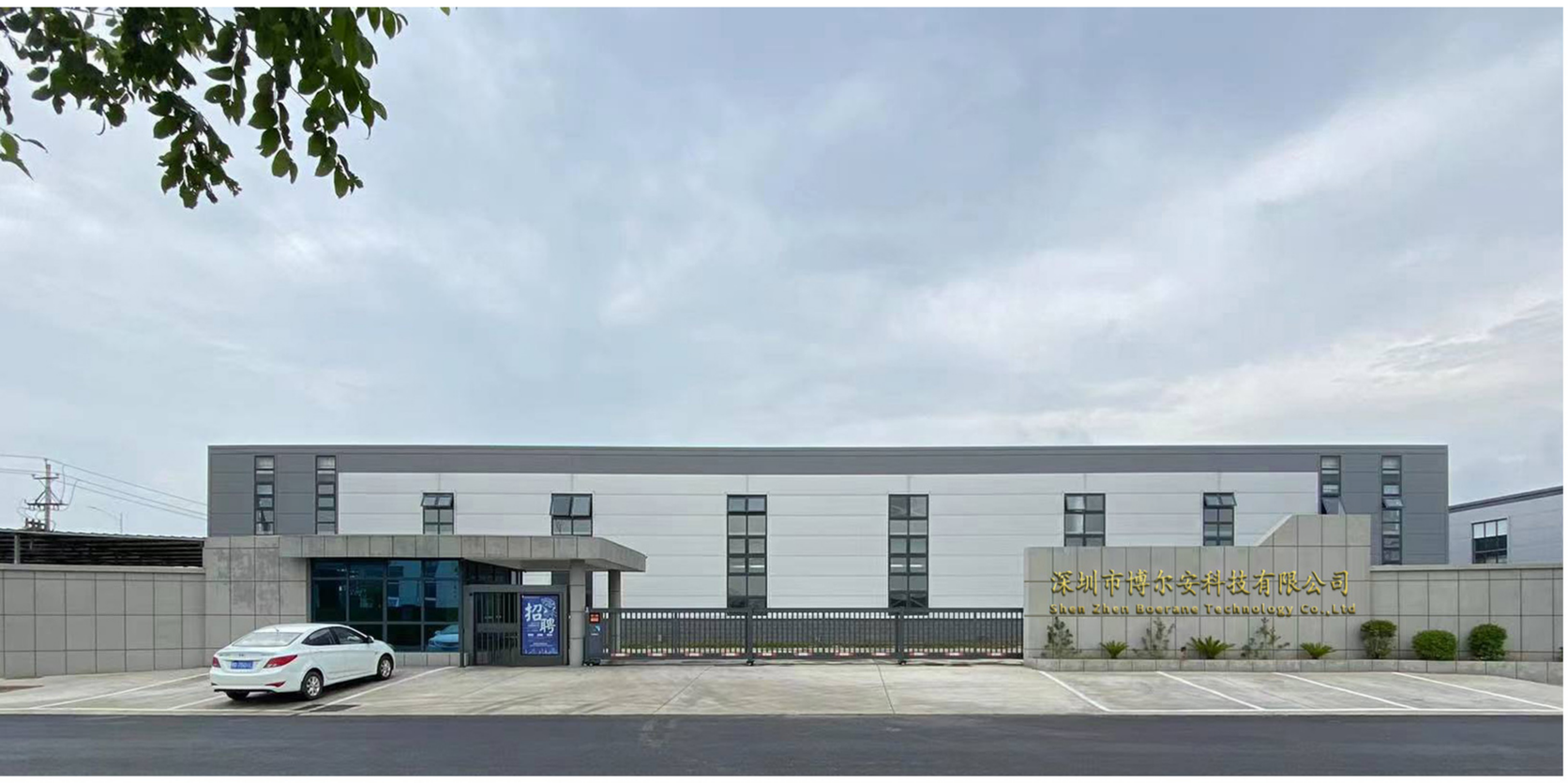

Shenzhen Boerane Technology Co., Ltd was established in 2004 as a proficient production and manufacturing enterprise that seamlessly integrates technology research, product manufacturing, and sales. Their product range includes Key Locking Inserts, Self Tapping Inserts, Wire Thread Inserts, Tailless Thread Inserts, Installation Tools, and Thread Repair Kits. With robust technical capabilities, advanced design standards, cutting-edge production equipment, and precision testing tools, the company specializes in offering comprehensive technical support throughout the entire process of threaded insert design and utilization.

Boerane is committed to technological innovation and refined product processing, having achieved success in fundamental research, new product development, process innovation, equipment enhancement, production control, quality management, and market expansion.

Their threaded insert products adhere to various international standards, catering to the aerospace, shipbuilding, high-voltage electrical components, and general mechanical sectors. The company also customizes products for European, American, and other foreign customers, following global standards. Boerane holds certifications for the “ISO9001:2015 Quality Management System”and “IATF 16949:2016‘’, demonstrating its commitment to responsible business practices.

Operating across 7000 square meters, the company comprises two plants covering 2000 and 1000 square meters, boasting an annual output exceeding 5 million USD. With over 80 employees, including 5 senior executives and a 12-member R&D team, Boerane remains dedicated to professionalism and quality.

Business goal centers on "Professional Focus, Building a Brand,” and business purpose revolves around “Quality Assurance, Reliable Price.” Upholding the values of integrity and pioneering, Boerane promises customers high-quality products and services in line with their commitment to excellence.

Product Capability

Auto-lathe turning
ODΦ0.5–20mm Tol.±0.01mm
CNC lathe turning
ODΦ0.5–250mmTol.±0.05mm
CNC Milling
800X600mm (LxW),Tol.±0.05mm
Grinding: Tol.±0.002mm
Screw heading & rolling:
Metric M8-m36
Unified Imperial #0-2"
Stamping: 1200 T max

- Automatic Lathe
- Ultraprecision Machining
- CNC Lathe
- Stamping Equipment
- Screw Machine
- CNC Machine
- Precision Grinding
- Injection machine

BOERANE
— Thread Inserts Expert —

Wire Thread Insert ...

Structural component - threadreinforcement and repair:

Wire thread inserts are thread reinforcementand repair.

Threads are reinforced whenever lowstrength materials (e.g aluminium,aluminium-magnesium alloys and fibre-reinforced plastics) are used. The nut threadis wear-resistant even in cases of frequent use.

Wire thread inserts allows miniaturisationand lightweight construction for thedevelopment of production parts.The wirethread inserts have been tried and tested formore than 60 years and have become awidely used in structural component.World-wide,the wire thread inserts areapproved for economical and lasting repairof damaged or worn out thread.

Apart from repair of valuable individualcomponents,parts used in large-scaleproduction which have been rejected due to-faults during thread production can bereintegrated in the production process.

The free running and screwlock thread insertcontrol values are W and d, when notinserted.

Its length can only be measured when theinsert is in position.

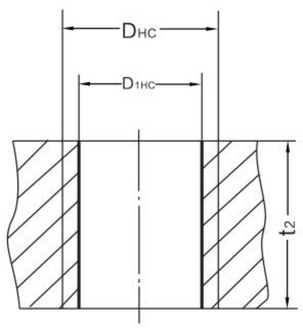

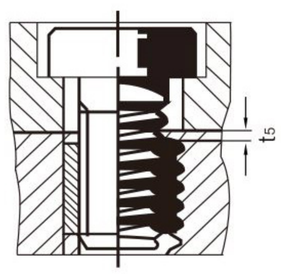

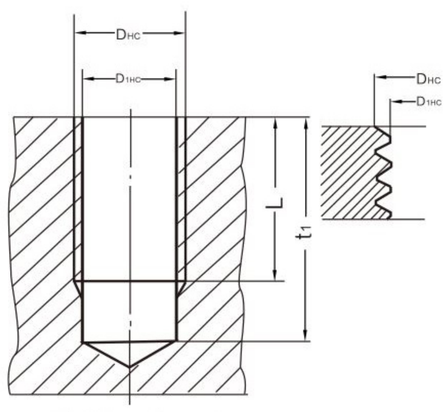

Holding thread

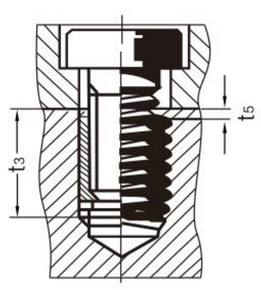

Composition

d = thread diameter

P = pitch

d_1 = outer diameter of thread insert prior to installation

D_{HC} = outer thread of tapped hole

D_{1HC} = thread core diameter

B =recommended twist drill diameter

t_1 = minimum depth of core holeaccording to DIN 76

L =nominal length of thread insert andminimum length of holding thread

t_3 =maximum screw-in depth if tang hasnot broken off

t_5 =distance of theread insert fromseparating surface =0.25P,if t_2 com-plieswith the above mentioned minimum value

Example for finding thearticle number:

L4012115-1

0=Free running type; 2=Screwlock typeL4012115-1

0=Stainless steelA2,X5 CrNi18 10

1=Bronze,CuSn 6

2=Nimonic 90,NiCr 20 Co 18 Ti, Sliverplated

3=Stainless steel A4,X6 CrNiMoTi17 12 2

4=InconelX 750,NiCr 15 Fe 7 TiAL,sliverplated

5=InconelX750,NiCr 15 Fe 7 TiAL,polished

6=Stainless steelA2,X5 CrNi 18 10cadmiun plated

7=Stainless steel A2, X5 CrNi 18 10magazineloaded

8=Bronze,CuSn 6,magazine loadedOther materials upon request.

Example for finding thearticle number:

- Gear box housing of magnesium alloys
- Thread reinforcement for oil drain plugs
- Exhaust systems
- Satellite technology
- Aeroplane engines
- Repeated installations
- Maintenance and repair
- Lamps
- Electrical appliances
- Hammer drills
- Printing presses

Tolerances Thread:

ISO 2768-m

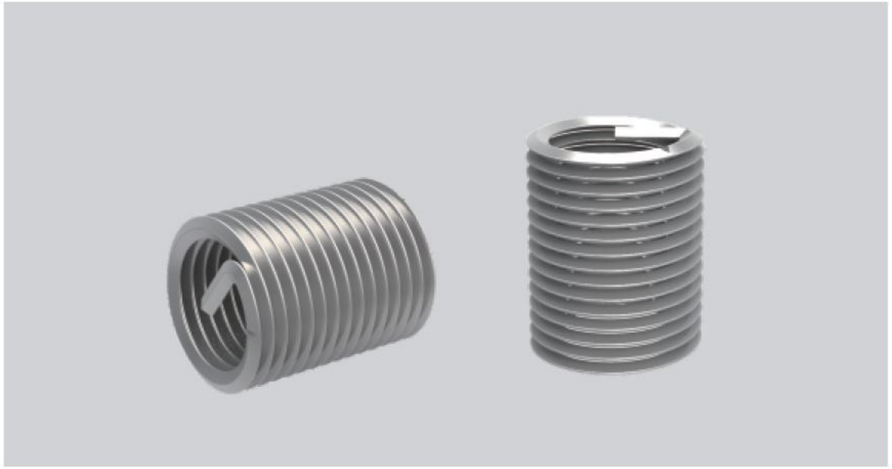

L4010 / L4012

Features

- Easy and fast installation.
- Corrosion and temperature resistant.
- Optimization of thread characteristics.
- They are available in free running and screw lock version.

Technical Data

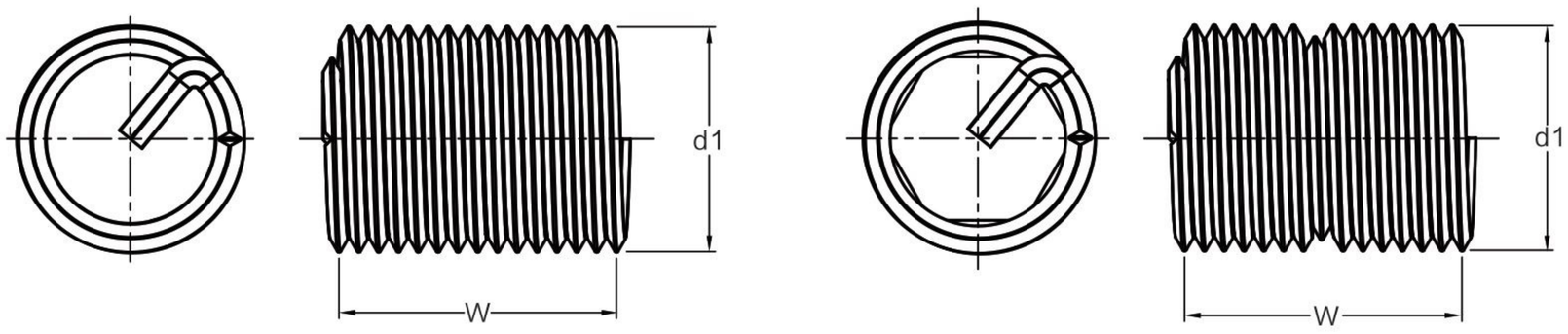

Drawing No.		d x P	K x d	L	W	d1 min. max.	B Tap Drill Size	t3 max.
Free Running	Screw-Lock							
L4010011	L4012011	M2X0.40	1d	2.0	2.9	2.6 – 2.8	2.1	1.8
L4010012	L4012012		1.5d	3.0	4.9			2.8
L4010013	L4012013		2d	4.0	6.9			3.8
L4010014	L4012014		2.5d	5.0	8.9			4.8
L4010015	L4012015		3d	6.0	10.9			5.8
L4010021	L4012021	M2.5X0.45	1d	2.5	3.5	3.3 – 3.5	2.6	2.3
L4010022	L4012022		1.5d	3.75	5.9			3.5
L4010023	L4012023		2d	5.0	8.1			4.8
L4010024	L4012024		2.5d	6.25	10.5			6.0
L4010025	L4012025		3d	7.5	12.9			7.3
L4010031	L4012031	M3X0.5	1d	3.0	3.9	3.8 – 4.0	3.2	2.7
L4010032	L4012032		1.5d	4.5	6.3			4.2
L4010033	L4012033		2d	6.0	8.7			5.7
L4010034	L4012034		2.5d	7.5	11.1			7.2
L4010035	L4012035		3d	9.0	13.5			8.7
L4010041	L4012041	M3.5X0.6	1d	3.5	3.7	4.42 – 4.60	3.7	3.2
L4010042	L4012042		1.5d	5.25	6.3			5.0
L4010043	L4012043		2d	7.0	8.7			6.7
L4010044	L4012044		2.5d	8.75	11.2			8.5
L4010045	L4012045		3d	10.5	13.3			10.2

Technical Data

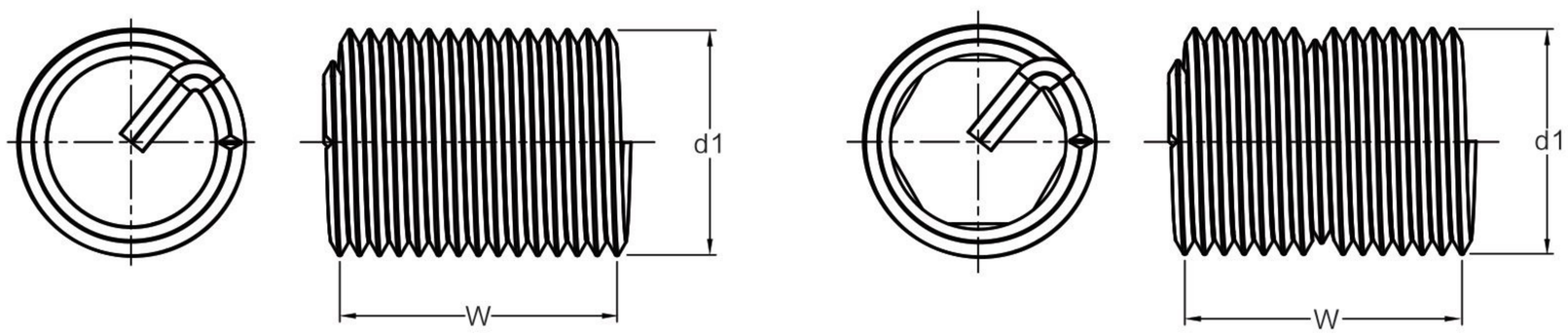

Drawing No.		d x P	K x d	L	W	d1 min. max.	B Tap Drill Size	t3 max.
Free Running	Screw-Lock							
L4010051	L4012051	M4X0.7	1d	4.0	3.7	5.05 – 5.25	4.2	3.6
L4010052	L4012052		1.5d	6.0	6.1			5.6
L4010053	L4012053		2d	8.0	8.4			7.6
L4010054	L4012054		2.5d	10.0	10.9			9.6
L4010055	L4012055		3d	12.0	13.2			11.6
L4010061	L4012061	M5X0.8	1d	5.0	4.3	6.35 – 6.6	5.2	4.6
L4010062	L4012062		1.5d	7.5	6.9			7.1
L4010063	L4012063		2d	10.0	9.7			9.6
L4010064	L4012064		2.5d	12.5	12.3			12.1
L4010065	L4012065		3d	15.0	14.8			14.6
L4010071	L4012071	M6X1.0	1d	6.0	4.2	7.6 – 7.85	6.3	5.5
L4010072	L4012072		1.5d	9.0	6.9			8.5
L4010073	L4012073		2d	12.0	9.6			11.5
L4010074	L4012074		2.5d	15.0	12.3			14.5
L4010075	L4012075		3d	18.0	14.6			17.5
L4010081	L4012081	M7X1.0	1d	7.0	5.3	8.65 – 8.9	7.3	6.5
L4010082	L4012082		1.5d	10.5	8.2			10.0
L4010083	L4012083		2d	14.0	11.1			13.5
L4010084	L4012084		2.5d	17.5	14.3			17.0
L4010085	L4012085		3d	21.0	17.4			20.5
L4010091	L4012091	M8X1.25	1d	8.0	4.7	9.85 – 10.1	8.4	7.4
L4010092	L4012092		1.5d	12.0	7.4			11.4
L4010093	L4012093		2d	16.0	10.6			15.4
L4010094	L4012094		2.5d	20.0	13.5			19.4
L4010095	L4012095		3d	24.0	16.4			23.4
L4010101	L4012101	M8X1.0	1d	8.0	6.1	9.85 – 10.1	8.3	7.5
L4010102	L4012102		1.5d	12.0	9.5			11.5
L4010103	L4012103		2d	16.0	12.9			15.5
L4010104	L4012104		2.5d	20.0	16.5			19.5
L4010105	L4012105		3d	24.0	19.9			23.5
L4010111	L4012111	M9X1.25	1d	9.0	5.3	10.85 – 11.1	9.4	8.4
L4010112	L4012112		1.5d	13.5	8.6			12.9
L4010113	L4012113		2d	18.0	11.9			17.4
L4010114	L4012114		2.5d	22.5	15.3			21.9
L4010115	L4012115		3d	27.0	18.1			26.4

Technical Data

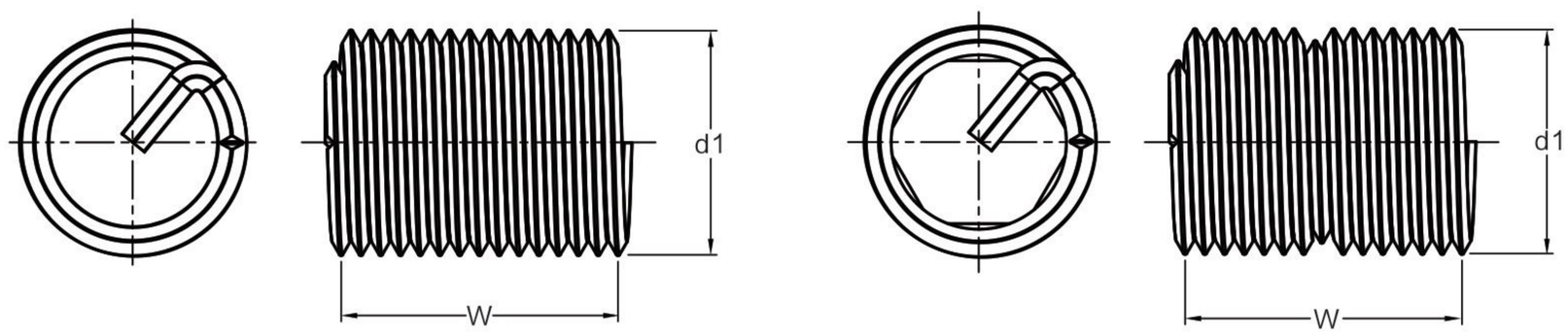

Drawing No.		d x P	K x d	L	W	d1 min. max.	B Tap Drill Size	t3 max.
Free Running	Screw-Lock							
L4010121	L4012121	M10X1.5	1d	10.0	5.0	12.1 −12.5	10.50	9.2
L4010122	L4012122		1.5d	15.0	8.1			14.2
L4010123	L4012123		2d	20.0	11.2			19.2
L4010124	L4012124		2.5d	25.0	14.2			24.2
L4010125	L4012125		3d	30.0	17.2			29.2
L4010131	L4012131	M10X1.0	1d	10.0	7.6	12.1 −12.5	10.25	9.5
L4010132	L4012132		1.5d	15.0	12.1			14.5
L4010133	L4012133		2d	20.0	16.3			19.5
L4010134	L4012134		2.5d	25.0	20.7			24.5
L4010135	L4012135		3d	30.0	25.0			29.5
L4010141	L4012141	M10X1.25	1d	10.0	6.0	12.1 −12.5	10.40	9.4
L4010142	L4012142		1.5d	15.0	9.7			14.4
L4010143	L4012143		2d	20.0	13.1			19.4
L4010144	L4012144		2.5d	25.0	16.9			24.4
L4010145	L4012145		3d	30.0	20.1			29.4
L4010151	L4012151	M11X1.5	1d	11.0	5.6	13.1 − 13.5	11.50	10.2
L4010152	L4012152		1.5d	16.5	9.0			15.7
L4010153	L4012153		2d	22.0	12.3			21.2
L4010154	L4012154		2.5d	27.5	15.7			26.7
L4010155	L4012155		3d	33.0	19.1			32.2
L4010161	L4012161	M12X1.75	1d	12.0	5.2	14.4 −14.8	12.50	11.1
L4010162	L4012162		1.5d	18.0	8.4			17.1
L4010163	L4012163		2d	24.0	11.7			23.1
L4010164	L4012164		2.5d	30.0	14.7			29.1
L4010165	L4012165		3d	36.0	18.0			35.1
L4010171	L4012171	M12X1.0	1d	12.0	9.3	14.4 − 14.8	12.25	11.5
L4010172	L4012172		1.5d	18.0	14.5			17.5
L4010173	L4012173		2d	24.0	19.5			23.5
L4010174	L4012174		2.5d	30.0	24.8			29.5
L4010175	L4012175		3d	36.0	30.0			35.5
L4010181	L4012181	M12X1.25	1d	12.0	7.4	14.4 −14.8	12.25	11.4
L4010182	L4012182		1.5d	18.0	11.6			17.4
L4010183	L4012183		2d	24.0	15.9			23.4
L4010184	L4012184		2.5d	30.0	20.0			29.4
L4010185	L4012185		3d	36.0	24.3			35.4

Technical Data

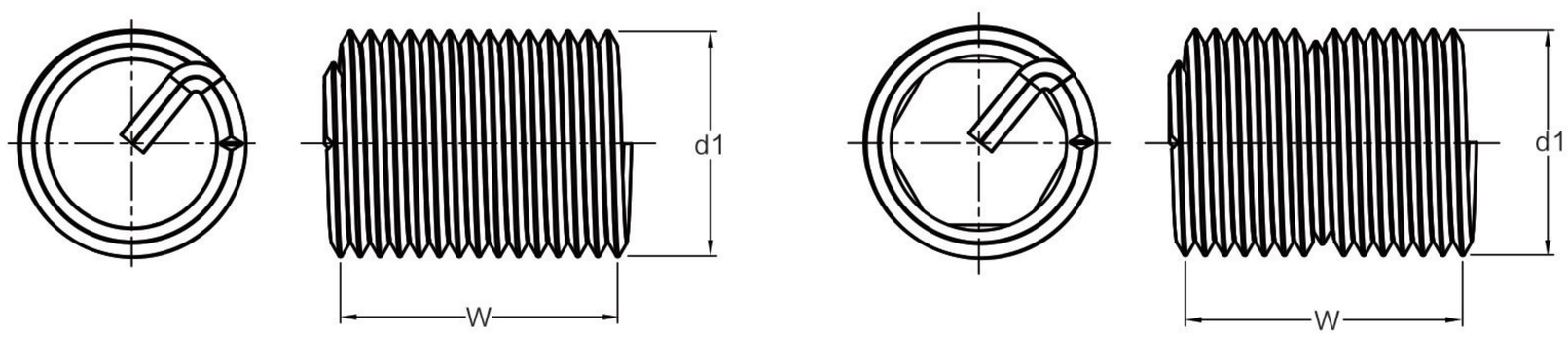

Drawing No.		d x P	K x d	L	W	d1 min. max.	B Tap Drill Size	t3 max.
Free Running	Screw-Lock							
L4010191	L4012191	M12X1.5	1d	12.0	6.2	14.4 – 14.8	12.50	11.2
L4010192	L4012192		1.5d	18.0	9.8			17.2
L4010193	L4012193		2d	24.0	13.5			23.2
L4010194	L4012194		2.5d	30.0	17.1			29.2
L4010195	L4012195		3d	36.0	20.8			35.2
L4010201	L4012201	M14X2.0	1d	14.0	5.6	16.8 – 17.2	14.50	13.0
L4010202	L4012202		1.5d	21.0	8.8			20.0
L4010203	L4012203		2d	28.0	12.0			27.0
L4010204	L4012204		2.5d	35.0	15.2			34.0
L4010211	L4012211	M14X1.0	1d	14.0	11.2	16.8 – 17.2	14.25	13.5
L4010212	L4012212		1.5d	21.0	17.2			20.5
L4010213	L4012213		2d	28.0	23.2			27.5
L4010214	L4012214		2.5d	35.0	29.2			34.5
L4010221	L4012221	M14X1.25	1d	8.4	4.6	16.8 – 17.2	14.25	7.8
L4010222	L4012222		1.5d	12.4	7.4			11.8
L4010223	L4012223		2d	14.4	9.1			13.8
L4010224	L4012224		2.5d	16.4	10.2			15.8
L4010231	L4012231	M14X1.5	1d	14.0	7.4	16.8 – 17.2	14.50	13.2
L4010232	L4012232		1.5d	21.0	11.6			20.2
L4010233	L4012233		2d	28.0	15.7			27.2
L4010234	L4012234		2.5d	35.0	19.9			34.2
L4010241	L4012241	M16X2.0	1d	16.0	6.5	19.0 – 19.4	16.50	15.0
L4010242	L4012242		1.5d	24.0	10.1			23.0
L4010243	L4012243		2d	32.0	13.8			31.0
L4010244	L4012244		2.5d	40.0	17.5			39.0
L4010251	L4012251	M16X1.5	1d	16.0	8.7	19.0 – 19.4	16.50	15.2
L4010252	L4012252		1.5d	24.0	13.4			23.2
L4010253	L4012253		2d	32.0	18.1			31.2
L4010254	L4012254		2.5d	40.0	22.9			39.2
L4010261	L4012261	M18X2.5	0.5d	9.0	2.3	21.5 – 22.0	18.75	7.7
L4010262	L4012262		0.75d	13.5	3.8			12.2
L4010263	L4012263		1d	18.0	5.6			16.7
L4010264	L4012264		1.5d	27.0	9.0			25.7
L4010265	L4012265		2d	36.0	12.3			34.7

Technical Data

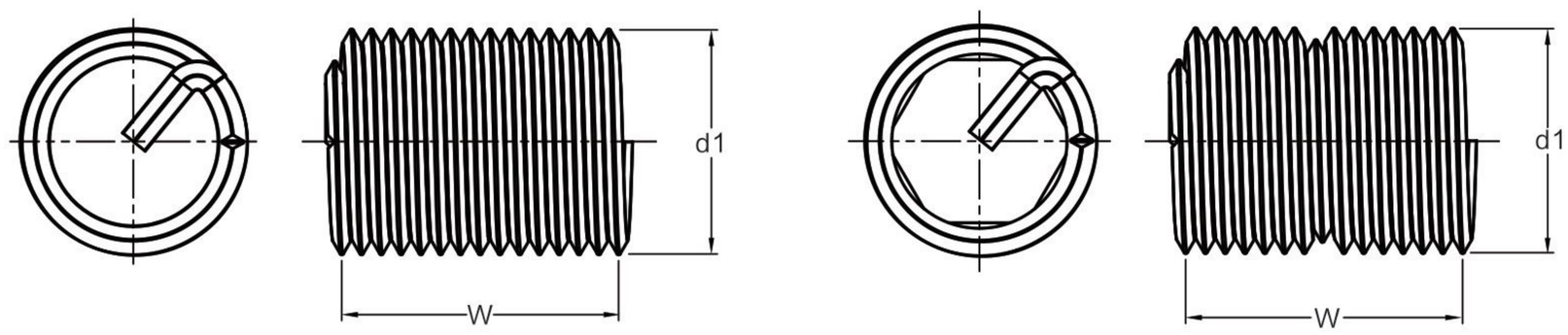

Drawing No.		d x P	K x d	L	W	d1 min. max.	B Tap Drill Size	t3 max.
Free Running	Screw-Lock							
L4010271	L4012271	M18X1.5	0.5d	9.0	4.2	21.5 – 22.0	18.50	8.2
L4010272	L4012272		0.75d	13.5	7.0			12.7
L4010273	L4012273		1d	18.0	9.5			17.2
L4010274	L4012274		1.5d	27.0	14.9			26.2
L4010275	L4012275		2d	36.0	20.2			35.2
L4010281	L4012281	M18X2.0	0.5d	9.0	3.1	21.5 – 22.0	18.50	8.0
L4010282	L4012282		0.75d	13.5	5.1			12.5
L4010283	L4012283		1d	18.0	7.1			17.0
L4010284	L4012284		1.5d	27.0	11.2			26.0
L4010285	L4012285		2d	36.0	15.1			35.0
L4010291	L4012291	M20X2.5	0.5d	10.0	2.7	23.7 – 24.2	20.75	8.7
L4010292	L4012292		0.75d	15.0	4.5			13.7
L4010293	L4012293		1d	20.0	6.3			18.7
L4010294	L4012294		1.5d	30.0	10.0			28.7
L4010295	L4012295		2d	40.0	13.7			38.7
L4010301	L4012301	M20X1.5	0.5d	10.0	4.9	23.7 – 24.2	20.50	9.2
L4010302	L4012302		0.75d	15.0	7.9			14.2
L4010303	L4012303		1d	20.0	10.7			19.2
L4010304	L4012304		1.5d	30.0	16.7			29.2
L4010305	L4012305		2d	40.0	22.4			39.2
L4010311	L4012311	M20X2.0	0.5d	10.0	3.5	23.7 – 24.2	20.50	9.0
L4010312	L4012312		0.75d	15.0	5.8			14.0
L4010313	L4012313		1d	20.0	8.0			19.0
L4010314	L4012314		1.5d	30.0	12.5			29.0
L4010315	L4012315		2d	40.0	16.8			39.0
L4010321	L4012321	M22X2.5	0.5d	11.0	3.0	26.3 – 26.8	22.75	9.7
L4010322	L4012322		0.75d	16.5	5.0			15.2
L4010323	L4012323		1d	22.0	6.9			20.7
L4010324	L4012324		1.5d	33.0	10.9			31.7
L4010325	L4012325	M22X1.5	2d	44.0	15.0	26.3 – 26.8	22.50	42.7
L4010331	L4012331		0.5d	11.0	5.5			10.2
L4010332	L4012332		0.75d	16.5	8.6			15.7
L4010333	L4012333		1d	22.0	11.7			21.2
L4010334	L4012334		1.5d	33.0	18.1			32.2
L4010335	L4012335		2d	44.0	24.5			43.2

Technical Data

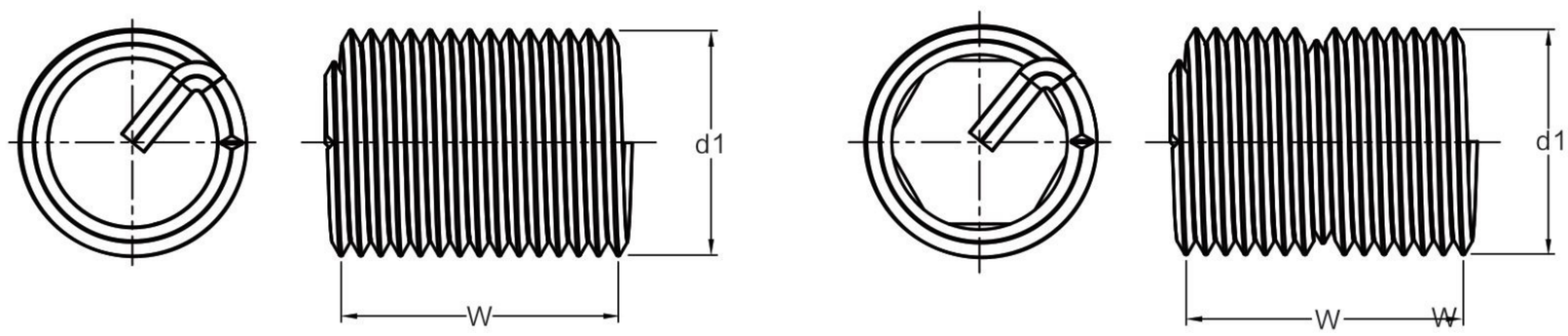

Drawing No.		d x P	K x d	L	W	d1 min. max.	B Tap Drill Size	t3 max.
Free Running	Screw-Lock							
L4010341	L4012341	M22X2.0	0.5d	11.0	3.9	26.3 – 26.8	22.50	10.0
L4010342	L4012342		0.75d	16.5	6.4			15.5
L4010343	L4012343		1d	22.0	8.7			21.0
L4010344	L4012344		1.5d	33.0	13.6			32.0
L4010345	L4012345		2d	44.0	18.4			43.0
L4010351	L4012351	M24X3.0	0.5d	12.0	2.6	28.6 – 29.1	24.75	10.5
L4010352	L4012352		0.75d	18.0	4.5			16.5
L4010353	L4012353		1d	24.0	6.2			22.5
L4010354	L4012354		1.5d	36.0	10.0			34.5
L4010355	L4012355		2d	48.0	14.0			46.5
L4010361	L4012361	M24X1.5	0.5d	12.0	6.0	28.6 – 29.1	24.50	11.2
L4010362	L4012362		0.75d	18.0	9.5			17.2
L4010363	L4012363		1d	24.0	12.9			23.2
L4010364	L4012364		1.5d	36.0	19.8			35.2
L4010365	L4012365		2d	48.0	26.7			47.2
L4010371	L4012371	M24X2.0	0.5d	12.0	4.3	28.6 – 29.1	24.50	11.0
L4010372	L4012372		0.75d	18.0	7.0			17.0
L4010373	L4012373		1d	24.0	9.6			23.0
L4010374	L4012374		1.5d	36.0	15.0			35.0
L4010375	L4012375		2d	48.0	20.2			47.0
L4010381	L4012381	M26X1.5	0.5d	13.0	6.5	31.0 – 31.5	26.50	12.2
L4010382	L4012382		0.75d	19.5	10.3			18.7
L4010383	L4012383		1d	26.0	14.0			25.2
L4010384	L4012384		1.5d	39.0	21.6			38.2
L4010385	L4012385		2d	52.0	29.1			51.2
L4010391	L4012391	M27X3.0	0.5d	13.5	3.2	32.2 – 32.7	27.75	12.0
L4010392	L4012392		0.75d	20.3	5.0			18.8
L4010393	L4012393		1d	27.0	7.1			25.5
L4010394	L4012394		1.5d	40.5	11.4			39.0
L4010395	L4012395		2d	54.0	15.4			52.5
L4010401	L4012401	M27X1.5	0.5d	13.5	6.7	32.2 – 32.7	27.50	12.7
L4010402	L4012402		0.75d	20.3	10.7			19.5
L4010403	L4012403		1d	27.0	14.6			26.2
L4010404	L4012404		1.5d	40.5	22.6			39.7
L4010405	L4012405		2d	54.0	30.0			53.2

Technical Data

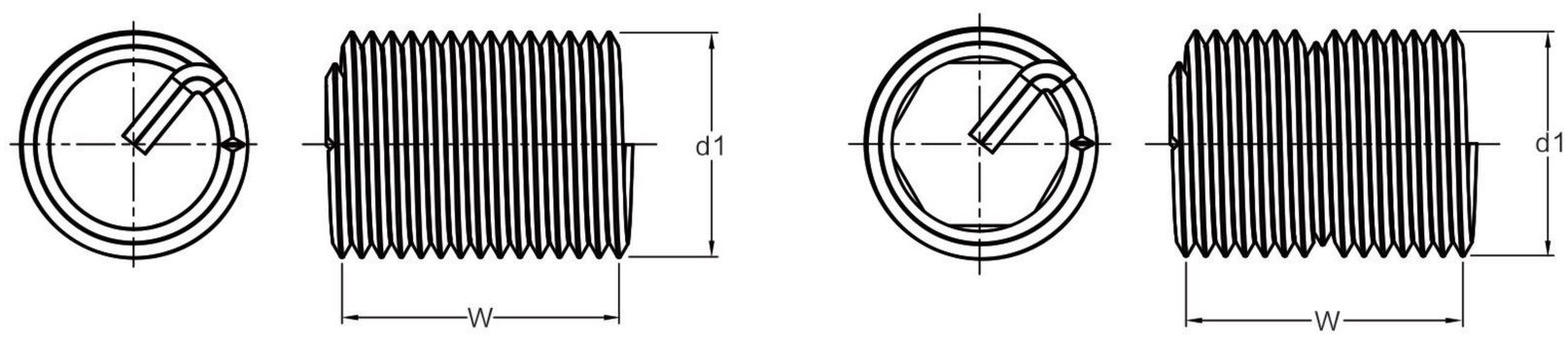

Drawing No.		d x P	K x d	L	W	d1 min. max.	B Tap Drill Size	t3 max.
Free Running	Screw-Lock							
L4010411	L4012411	M27X2.0	0.5d	13.5	5.1	32.2 – 32.7	27.50	12.5
L4010412	L4012412		0.75d	20.3	7.9			19.3
L4010413	L4012413		1d	27.0	10.8			26.0
L4010414	L4012414		1.5d	40.5	16.8			39.5
L4010415	L4012415		2d	54.0	22.6			53.0
L4010421	L4012421	M28X1.5	0.5d	14.0	7.1	33.1 – 33.6	28.50	13.2
L4010422	L4012422		0.75d	21.0	11.1			20.2
L4010423	L4012423		1d	28.0	15.2			27.2
L4010424	L4012424		1.5d	42.0	23.3			41.2
L4010425	L4012425		2d	56.0	31.4			55.2
L4010431	L4012431	M30X3.5	0.5d	15.0	3.0	35.2 – 35.7	31.00	13.2
L4010432	L4012432		0.75d	22.5	4.9			20.7
L4010433	L4012433		1d	30.0	7.0			28.2
L4010434	L4012434		1.5d	45.0	11.0			43.2
L4010435	L4012435		2d	60.0	14.9			58.2
L4010441	L4012441	M30X1.5	0.5d	15.0	7.8	35.2 – 35.7	30.50	14.2
L4010442	L4012442		0.75d	22.5	12.2			21.7
L4010443	L4012443		1d	30.0	16.5			29.2
L4010444	L4012444		1.5d	45.0	25.3			44.2
L4010445	L4012445		2d	60.0	34.0			59.2
L4010451	L4012451	M30X2.0	0.5d	15.0	5.7	35.2 – 35.7	30.50	14.0
L4010452	L4012452		0.75d	22.5	9.0			21.5
L4010453	L4012453		1d	30.0	12.3			29.0
L4010454	L4012454		1.5d	45.0	19.0			44.0
L4010455	L4012455		2d	60.0	25.5			59.0
L4010461	L4012461	M33X3.5	0.5d	16.5	3.4	38.3 – 38.8	34.00	14.7
L4010462	L4012462		0.75d	24.8	5.6			23.0
L4010463	L4012463		1d	33.0	7.8			31.2
L4010464	L4012464		1.5d	49.5	12.2			47.7
L4010465	L4012465		2d	66.0	16.5			64.2
L4010471	L4012471	M33X2.0	0.5d	16.5	6.4	38.3 – 38.8	33.50	15.5
L4010472	L4012472		0.75d	24.8	10.1			23.8
L4010473	L4012473		1d	33.0	13.7			32.0
L4010474	L4012474		1.5d	49.5	21.2			48.5
L4010475	L4012475		2d	66.0	28.4			65.0

Technical Data

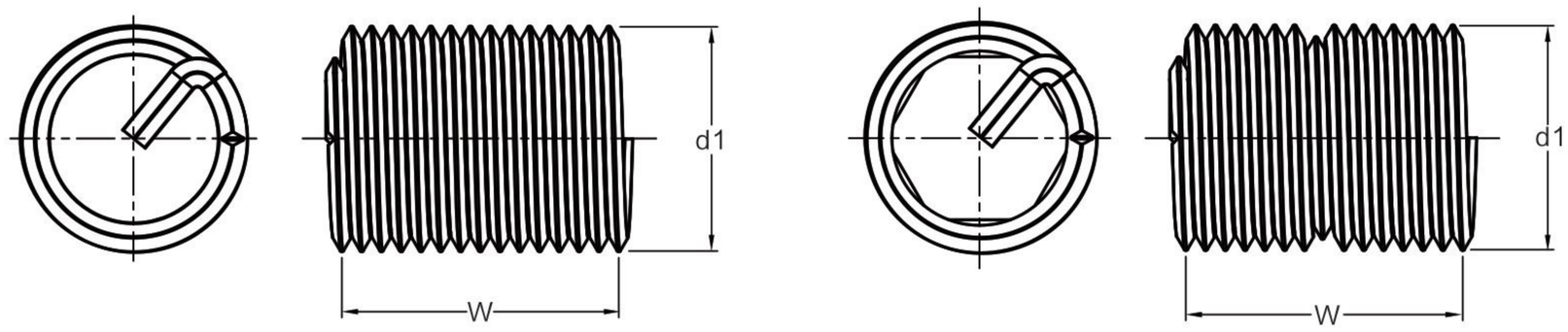

Wire Plus - UNC/NC

Drawing No.		d	K x d	L	W	d1 min. max.	B Tap Drill Size	t3 max.
Free Running	Screw-Lock							
L4010561	L4012561	2-56	1d	2.2	3.0	2.7 - 2.9	2.4	1.8
L4010562	L4012562		1.5d	3.3	5.25			2.9
L4010563	L4012563		2d	4.4	7.4			3.9
L4010564	L4012564		2.5d	5.5	9.6			5.0
L4010571	L4012571	4-40	1d	2.9	2.8	3.6 - 4.0	3.1	2.5
L4010572	L4012572		1.5d	4.3	4.8			3.9
L4010573	L4012573		2d	5.8	6.8			5.4
L4010574	L4012574		2.5d	7.2	8.8			6.8
L4010581	L4012581	5-40	1d	3.2	3.3	4.0 - 4.4	3.4	2.8
L4010582	L4012582		1.5d	4.8	5.5			4.3
L4010583	L4012583		2d	6.4	7.8			6.0
L4010584	L4012584		2.5d	7.9	10.0			7.5
L4010591	L4012591	6-32	1d	3.5	2.8	4.5 - 4.9	3.8	3.1
L4010592	L4012592		1.5d	5.3	4.8			4.9
L4010593	L4012593		2d	7.0	6.7			6.6
L4010594	L4012594		2.5d	8.8	8.7			8.4
L4010601	L4012601	8-32	1d	4.2	3.5	5.2 - 5.6	4.4	3.8
L4010602	L4012602		1.5d	6.3	5.9			5.9
L4010603	L4012603		2d	8.3	8.3			8.0
L4010604	L4012604		2.5d	10.5	10.7			10.1
L4010611	L4012611	10-24	1d	4.8	2.9	6.2 - 6.6	5.2	4.3
L4010612	L4012612		1.5d	7.2	5.0			6.7
L4010613	L4012613		2d	9.6	7.1			9.1
L4010614	L4012614		2.5d	12.1	9.2			11.6
L4010621	L4012621	12-24	1d	5.5	3.5	6.8 - 7.2	5.8	5.0
L4010622	L4012622		1.5d	8.2	5.9			7.7
L4010623	L4012623		2d	11.0	8.3			10.5
L4010624	L4012624		2.5d	13.7	10.7			13.2
L4010631	L4012631	1/4"-20	1d	6.4	3.4	8.0 - 8.4	6.7	5.8
L4010632	L4012632		1.5d	9.5	5.7			8.9
L4010633	L4012633		2d	12.7	8.0			12.1
L4010634	L4012634		2.5d	15.9	10.3			15.3
L4010641	L4012641	5/16"-18	1d	7.9	4.0	9.7 - 10.2	8.4	7.2
L4010642	L4012642		1.5d	11.9	6.6			11.2
L4010643	L4012643		2d	15.9	9.3			15.2
L4010644	L4012644		2.5d	19.8	11.9			19.1

Technical Data

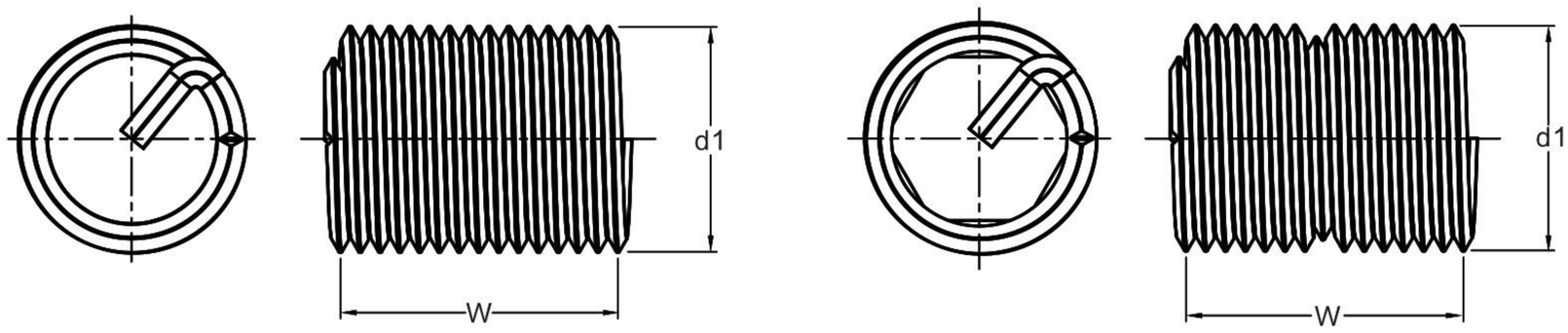

Drawing No.		d	K x d	L	W	d1 min. max.	B Tap Drill Size	t3 max.
Free Running	Screw-Lock							
L4010651	L4012651	3/8"−16	1d	9.5	4.4	11.5 − 12.0	10.0	8.7
L4010652	L4012652		1.5d	14.3	7.2			13.5
L4010653	L4012653		2d	19.1	10.1			18.3
L4010654	L4012654		2.5d	23.8	12.9			23.0
L4010661	L4012661	7/16"−14	1d	11.1	4.5	13.4 − 14.0	11.6	10.2
L4010662	L4012662		1.5d	16.7	7.4			15.8
L4010663	L4012663		2d	22.2	10.3			21.3
L4010664	L4012664		2.5d	27.8	13.1			26.9
L4010671	L4012671	1/2"−13	1d	12.7	4.8	15.2 − 15.8	13.2	11.7
L4010672	L4012672		1.5d	19.1	7.9			18.1
L4010673	L4012673		2d	25.4	10.9			24.4
L4010674	L4012674		2.5d	31.8	13.9			30.8

Other sizes, special designs and materials on request.

Technical Data

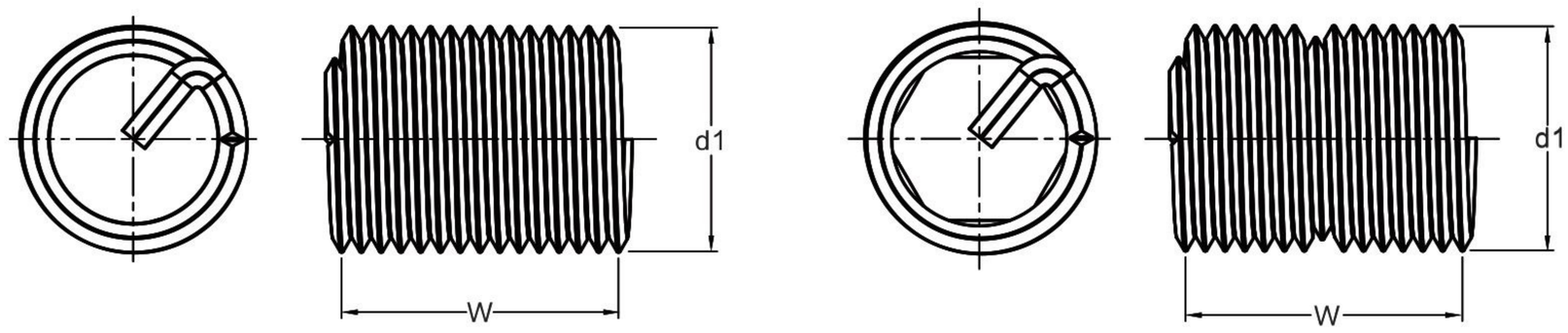

Wire Classic - UNC/NC

Drawing No.		d	K x d	L	W	d1 min. max.	B Tap Drill Size	t3 max.
Free Running	Screw-Lock							
L4010681	L4012681	9/16"−12	1d	14.3	5.1	17.0 − 17.6	14.9	13.2
L4010682	L4012682		1.5d	21.5	8.3			20.4
L4010683	L4012683		2d	28.6	11.5			27.5
L4010684	L4012684		2.5d	35.7	14.7			34.6
L4010691	L4012691	5/8"−11	1d	15.9	5.3	18.9 − 19.5	16.6	14.7
L4010692	L4012692		1.5d	23.8	8.3			22.6
L4010693	L4012693		2d	31.8	11.8			30.6
L4010694	L4012694		2.5d	39.7	15.0			38.5
L4010701	L4012701	3/4"−10	1d	19.1	5.9	22.4 − 23.0	19.7	17.8
L4010702	L4012702		1.5d	28.6	9.4			27.3
L4010703	L4012703		2d	38.1	13.0			36.8
L4010704	L4012704		2.5d	47.6	16.6			46.3
L4010711	L4012711	7/8"−9	1d	22.2	6.3	26.0 − 26.7	23.0	20.8
L4010712	L4012712		1.5d	33.3	10.0			31.9
L4010713	L4012713		2d	44.5	13.7			43.1
L4010714	L4012714		2.5d	55.6	17.4			54.2
L4010721	L4012721	1"−8	1d	25.4	6.4	29.6 − 30.4	26.2	23.8
L4010722	L4012722		1.5d	38.1	10.2			36.5
L4010723	L4012723		2d	50.8	14.0			49.2
L4010724	L4012724		2.5d	63.5	17.8			61.9
L4010731	L4012731	1 1/8"−7	1d	28.6	6.3	33.4 − 34.4	29.5	26.8
L4010732	L4012732		1.5d	42.9	10.0			41.1
L4010733	L4012733		2d	57.2	13.8			55.4
L4010734	L4012734		2.5d	–	–			–
L4010741	L4012741	1 1/4"−7	1d	31.8	7.1	36.7 − 37.7	33.0	30.0
L4010742	L4012742		1.5d	47.6	11.3			45.8
L4010743	L4012743		2d	63.5	15.4			61.7
L4010744	L4012744		2.5d	–	–			–
L4010751	L4012751	1 3/8"−6	1d	34.9	6.6	40.6 − 41.7	36.0	32.8
L4010752	L4012752		1.5d	52.4	10.6			50.3
L4010753	L4012753		2d	69.9	14.4			67.8
L4010754	L4012754		2.5d	–	–			–
L4010761	L4012761	1 1/2"−6	1d	38.1	7.4	43.9 − 45.0	39.5	36.0
L4010762	L4012762		1.5d	57.2	11.6			55.1
L4010763	L4012763		2d	76.2	15.9			74.1
L4010764	L4012764		2.5d	–	–			–

Technical Data

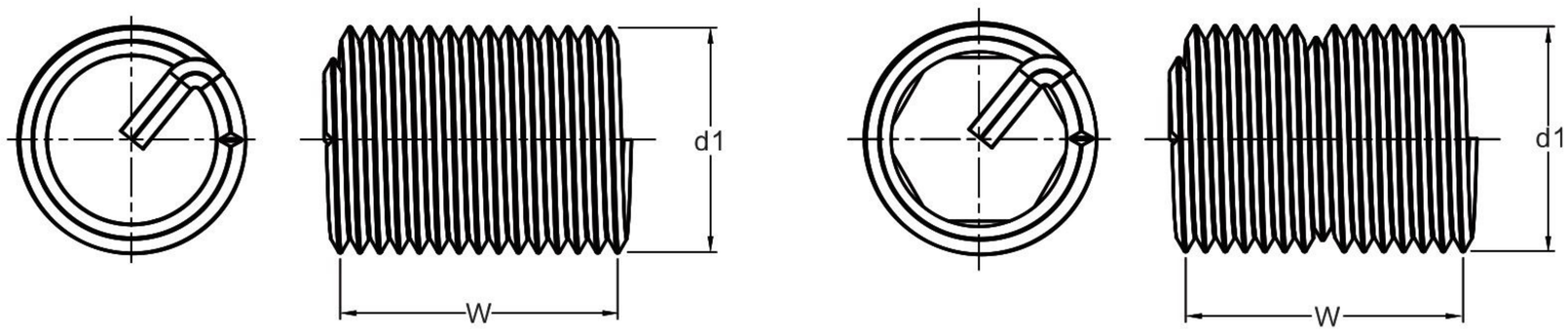

Wire Plus - UNF/NF

Drawing No.		d	K x d	L	W	d1 min. max.	B Tap Drill Size	t3 max.
Free Running	Screw-Lock							
L4010771	L4012771	4-48	1d	2.8	3.4	3.7 - 4.1	3.0	2.5
L4010772	L4012772		1.5d	4.3	5.6			4.0
L4010773	L4012773		2d	5.7	7.9			5.4
L4010774	L4012774		2.5d	7.1	10.3			6.7
L4010781	L4012781	6-40	1d	3.5	3.6	4.5 - 4.9	3.8	3.1
L4010782	L4012782		1.5d	5.3	6.0			4.9
L4010783	L4012783		2d	7.0	8.4			6.6
L4010784	L4012784		2.5d	8.8	10.8			8.4
L4010791	L4012791	8-36	1d	4.2	4.0	5.3 - 5.7	4.4	3.8
L4010792	L4012792		1.5d	6.3	6.6			5.9
L4010793	L4012793		2d	8.3	9.1			7.9
L4010794	L4012794		2.5d	10.5	11.7			10.1
L4010801	L4012801	10-32	1d	4.8	4.1	6.1- 6.5	5.1	4.4
L4010802	L4012802		1.5d	7.2	6.8			6.8
L4010803	L4012803		2d	9.6	9.5			9.2
L4010804	L4012804		2.5d	12.1	12.1			11.7
L4010811	L4012811	1/4"-28	1d	6.4	5.0	7.8 - 8.3	6.7	5.9
L4010812	L4012812		1.5d	9.5	8.1			9.0
L4010813	L4012813		2d	12.7	11.3			12.2
L4010814	L4012814		2.5d	15.9	14.4			15.4
L4010821	L4012821	5/16"-24	1d	7.9	5.5	9.7 - 10.2	8.2	7.4
L4010822	L4012822		1.5d	11.9	8.9			11.4
L4010823	L4012823		2d	15.9	12.2			15.4
L4010824	L4012824		2.5d	19.8	15.6			19.3
L4010831	L4012831	3/8"-24	1d	9.5	6.9	11.4 - 11.9	9.8	9.0
L4010832	L4012832		1.5d	14.3	10.9			13.8
L4010833	L4012833		2d	19.1	14.9			18.6
L4010834	L4012834		2.5d	23.8	19.0			23.3
L4010841	L4012841	7/16"-20	1d	11.1	6.6	13.4 - 13.9	11.5	10.5
L4010842	L4012842		1.5d	16.7	10.6			16.1
L4010843	L4012843		2d	22.2	14.5			21.6
L4010844	L4012844		2.5d	27.8	18.4			27.2
L4010851	L4012851	1/2"-20	1d	12.7	7.8	15.1 - 15.7	13.1	12.1
L4010852	L4012852		1.5d	19.1	12.3			18.5
L4010853	L4012853		2d	25.4	16.8			24.8
L4010854	L4012854		2.5d	31.8	21.3			31.2

Technical Data

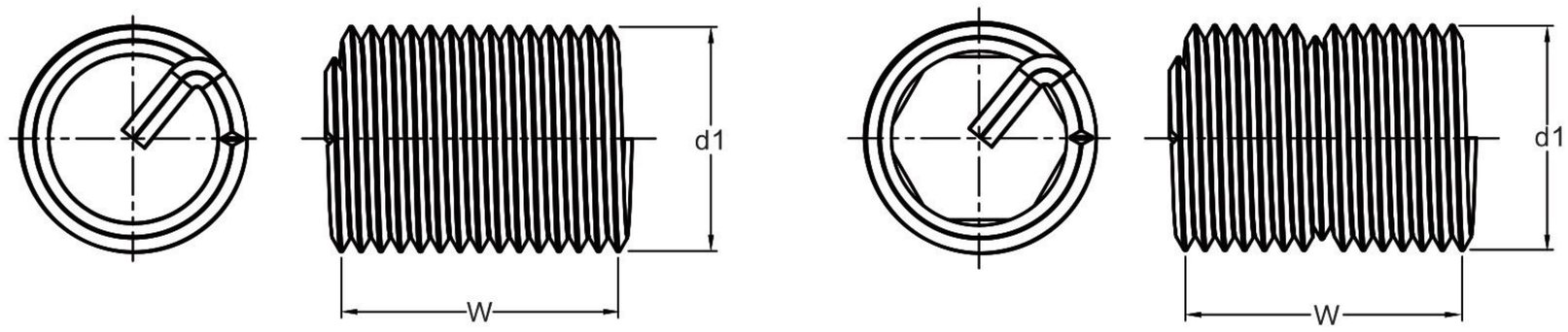

Wire Classic - UNF/NF

Drawing No.		d	K x d	L	W	d1 min. max.	B Tap Drill Size	t3 max.
Free Running	Screw-Lock							
L4010861	L4012861	9/16"−18	1d	14.3	7.9	16.9 − 17.6	14.7	13.6
L4010862	L4012862		1.5d	21.5	12.5			20.8
L4010863	L4012863		2d	28.6	17.1			27.9
L4010864	L4012864		2.5d	35.7	21.6			35.0
L4010871	L4012871	5/8"−18	1d	15.9	8.9	18.6 − 19.3	16.3	15.2
L4010872	L4012872		1.5d	23.8	14.1			23.1
L4010873	L4012873		2d	31.8	19.1			31.1
L4010874	L4012874		2.5d	39.7	24.3			39.0
L4010881	L4012881	3/4"−16	1d	19.1	9.7	22.2 − 22.9	19.5	18.3
L4010882	L4012882		1.5d	28.6	15.1			27.8
L4010883	L4012883		2d	38.1	20.6			37.3
L4010884	L4012884		2.5d	47.7	26.0			46.9
L4010891	L4012891	7/8"−14	1d	22.2	9.9	26.0 − 26.7	22.7	21.3
L4010892	L4012892		1.5d	33.3	15.4			32.4
L4010893	L4012893		2d	44.5	21.0			43.6
L4010894	L4012894		2.5d	55.6	26.6			54.7
L4010901	L4012901	1"−14	1d	25.4	11.5	29.4 − 30.1	26.0	24.5
L4010902	L4012902		1.5d	38.1	17.9			37.2
L4010903	L4012903		2d	50.8	24.3			49.9
L4010904	L4012904		2.5d	63.5	30.6			62.6
L4010911	L4012911	1"−12	1d	25.4	9.7	29.7 − 30.4	26.0	24.3
L4010912	L4012912		1.5d	38.1	15.1			37.0
L4010913	L4012913		2d	50.8	20.6			49.7
L4010914	L4012914		2.5d	63.5	26.1			62.4
L4010921	L4012921	1 1/8"−12	1d	28.6	10.1	33.2 − 33.9	29.0	27.5
L4010922	L4012922		1.5d	42.9	17.3			41.8
L4010923	L4012923		2d	57.2	23.4			56.1
L4010924	L4012924		2.5d	–	–			–
L4010931	L4012931	1 1/4"−12	1d	31.8	12.4	36.6 − 37.3	32.5	30.7
L4010932	L4012932		1.5d	47.6	19.3			46.5
L4010933	L4012933		2d	63.5	26.1			62.4
L4010934	L4012934		2.5d	–	–			–
L4010941	L4012941	1 3/8"−12	1d	34.9	13.8	40.0 − 40.9	35.5	33.8
L4010942	L4012942		1.5d	52.4	21.3			51.3
L4010943	L4012943		2d	69.9	28.9			68.8
L4010944	L4012944		2.5d	–	–			–

Installation instruction

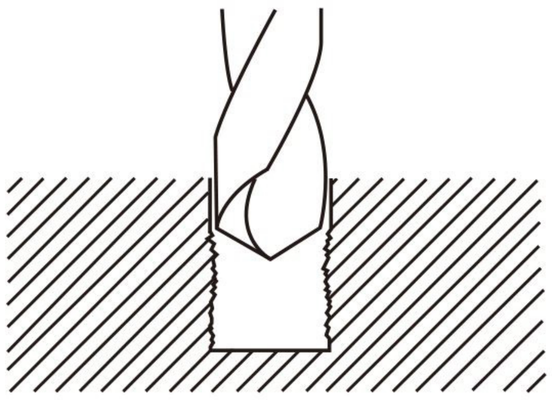

Step 1:
Drill out the hole with the specified drill size.

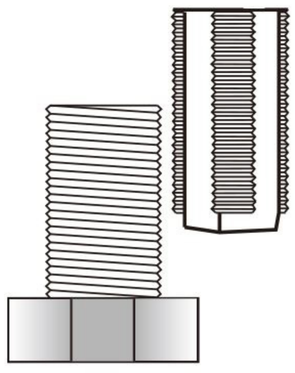

Step 2:
Confirm that the thread and pitch of the bolt match the tap.

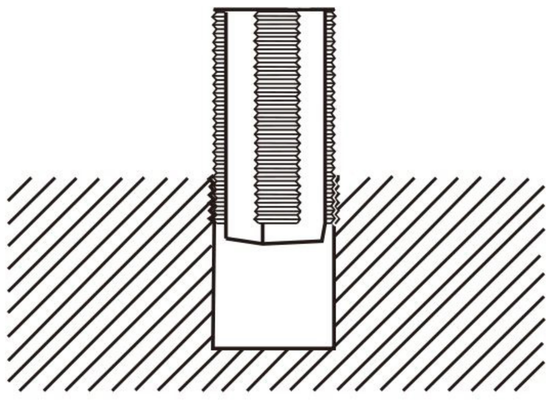

Step 3:
Tap the hole with the specified tap.

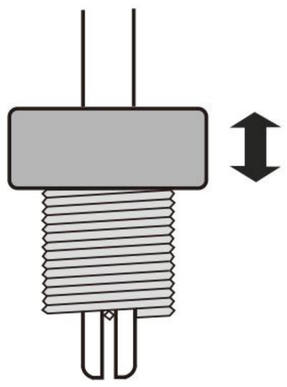

Step 4:
Set the stop on the installation tool so the tang iscentered in the slot.

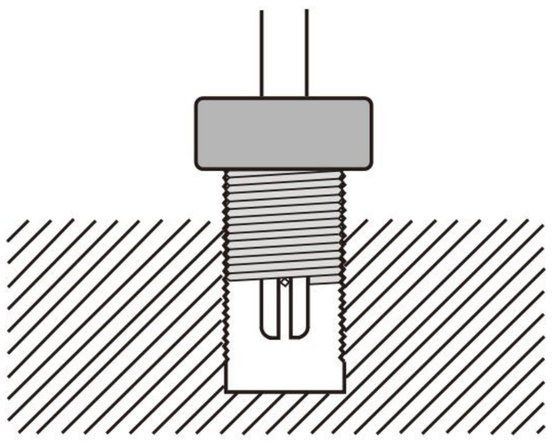

Step 5:
Wind the insert into the hole with a slight downwara pressure unit 1/4 or ½ turn below the surface..

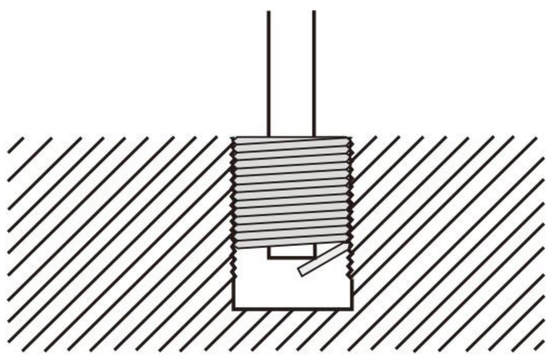

Step 6:
Place the tang break off tool on the tang and tap downsharply with a hammer..